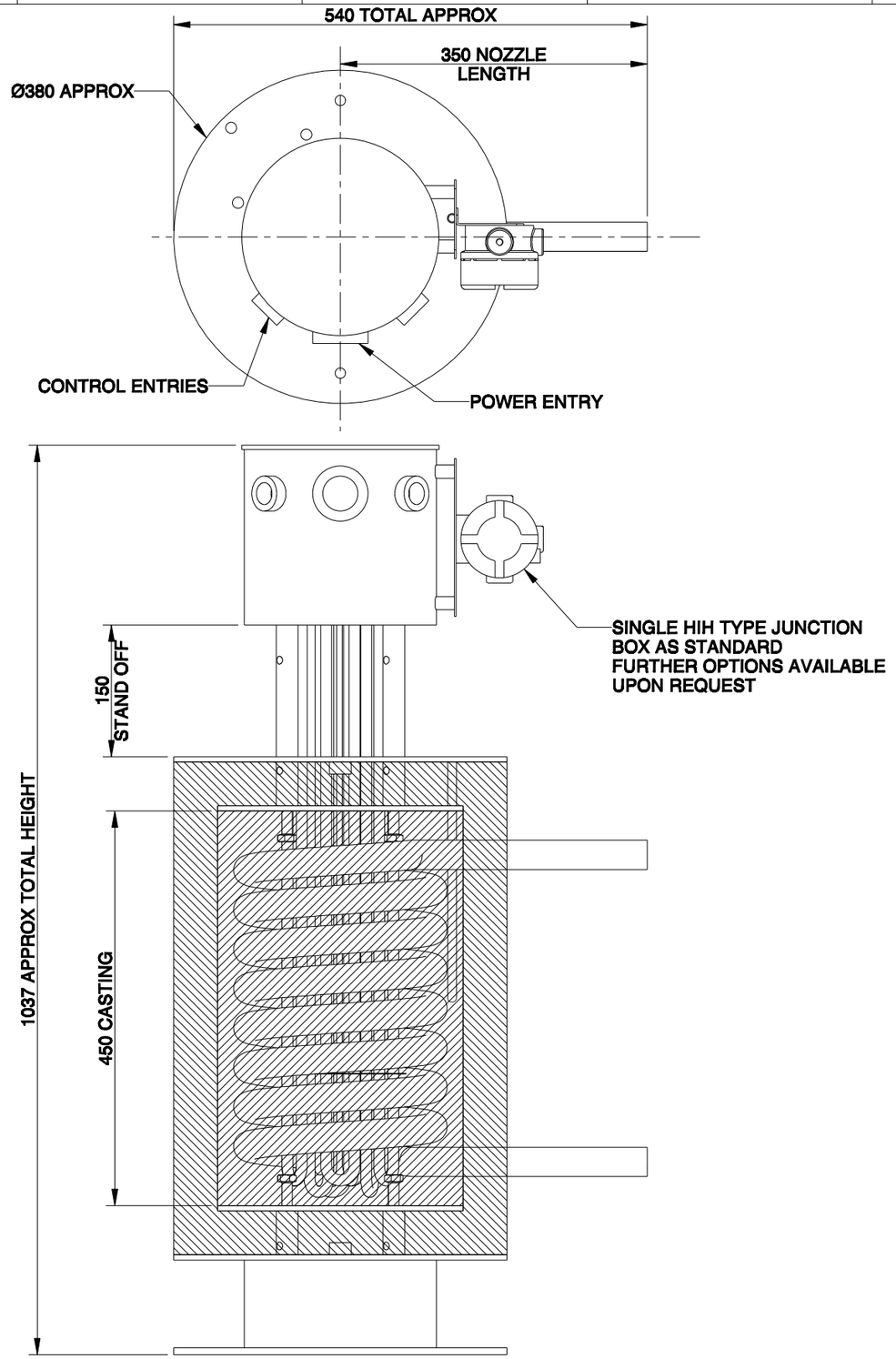

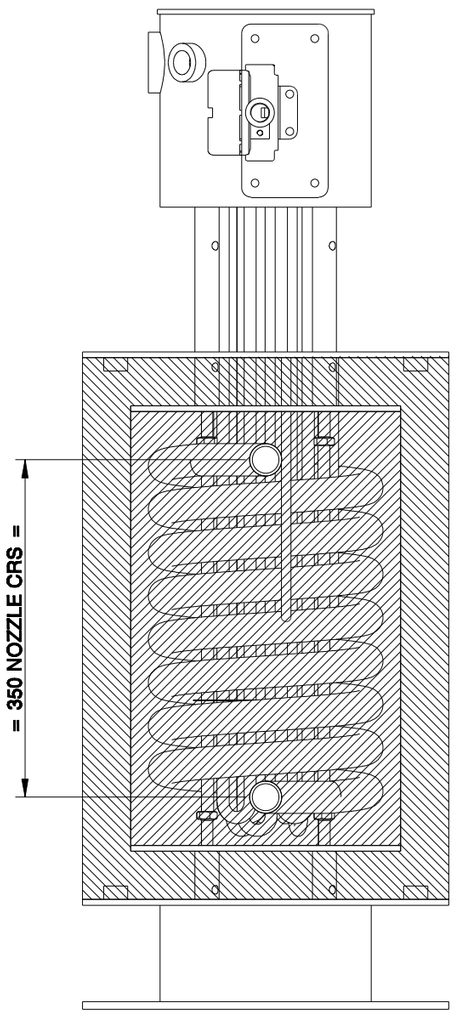

MOUNTING DETAILS

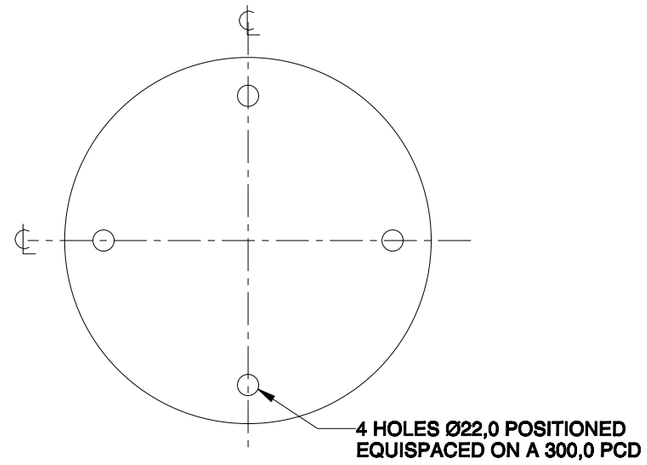

CERTIFIED PRODUCT

NO MODIFICATIONS PERMITTED WITHOUT THE APPROVAL OF THE QA MANAGER

DOES THIS CHANGE AFFECT ANY CERTIFICATION OR CERTIFICATE SCHEDULE DRAWING?

IF YES, RECORD THE DCN No. IN THE COLUMN TO THE RIGHT

DCN No	Y/N	REV	DATE	COMMENTS

LIFECYCLE STATE		
In Work		
DRWN	CHKD	APPR

3rd ANGLE PROJECTION

DO NOT SCALE

TOLERANCES UNLESS OTHERWISE STATED

0	± 1.5mm
0.0	± 0.5mm
0.00	± 0.25mm
0.000	± 0.1mm
ANGULAR	± 2°

ALL DIMENSIONS IN MILLIMETRES UNLESS OTHERWISE STATED

DO NOT SCALE !

IF IN DOUBT, ASK !

WHERE ELECTRONIC DOCUMENTS ARE SUPPLIED, THE END PRODUCT MUST CONFORM TO THE PAPER ORIGINAL

FORMAT Pro/E

EXHEAT

www.exheat.com

THIS DRAWING IS THE COPYRIGHT AND PROPERTY OF

EXHEAT LTD

NORFOLK ENGLAND

BSI UKAS QUALITY MANAGEMENT 003

Certificate No. FM 26078

TITLE

CAST HEATER FLOOR MOUNTED

EXHEAT DRAWING NUMBER	REV